LIMITED EDITION
Hardtop

M-092 blue
M-093 silver
M-094 black

EXTRAORDINARY
IN A CLASS OF THE EXQUISITE

CMC
Exclusive Modelle

SCALE
1:18

Ferrari 250 California SWB 1960

Ferrari 250 California SWB

Limited Edition – Hardtop

Admittedly, it's not easy to choose between these three incredibly beautiful Ferraris because each of these special editions has its own particular elegance.

CMC has created three attractive exterior finishes in blue, silver and black as three limited editions, all based on the legendary Ferrari 250 California SWB standard edition (item no. M-091 in red).

The interior colors have also been specially selected to complement the external paintwork – so the black is done in a red leather interior, the silver is done in a black interior, and the blue is done in a beige interior.

This is a very limited edition, with only 2,500 units available worldwide.

A special feature is that each model has a detachable hardtop so that you can turn your roadster into a coupé. This special edition is rounded off with a smart trolley for displaying the hardtop.

Don't miss out – choose your favorite color now. We hope your new "Cal-Spyder" will bring you endless fun and excitement.

Item number M-092 blue

Item number M-093 silver

Item number M-094 black

The instruments of the dashboard are accurately replicated with readable scales.

Another highlight: For the first time CMC presents a fully functional trunk lock.

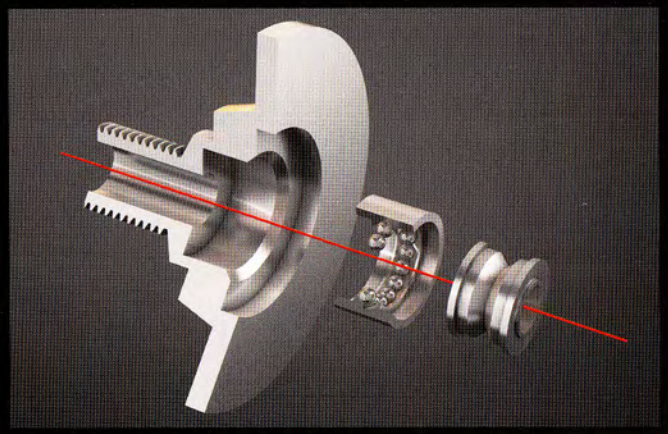

Latest development in the CMC wheel-making technology. For the first time it incorporates the precision engineering of ball bearings. Pure innovation!

Detachable hardtop with separate trolley for elegant display and safekeeping.

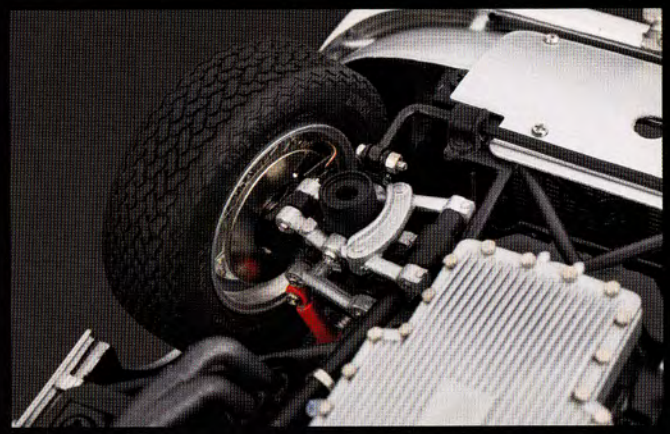

Elaborately replicated cylindrical spring suspension and a brake unit true to the original.

***Item number M-092** blue, M-093 silver, M-094 black*
A handmade miniature of the first class, assembled from 1,634 single parts. A dream model to fall in love with.

Ferrari 250 California SWB

Technical Data of the Original Vehicle:

12-cylinder V-engine with a 60° cylinder adjustment and two overhead cam shafts

Maximum output:	*280 hp at 7,000 rpm*
Displacement:	*2,953 ccm*
Top speed:	*approx. 270 km/h*
Total length:	*4,200 mm*
Wheel base:	*2,400 mm*
Front Track width:	*1,354 (1,378) mm*
Rear Track width:	*1,349 (1,374) mm*

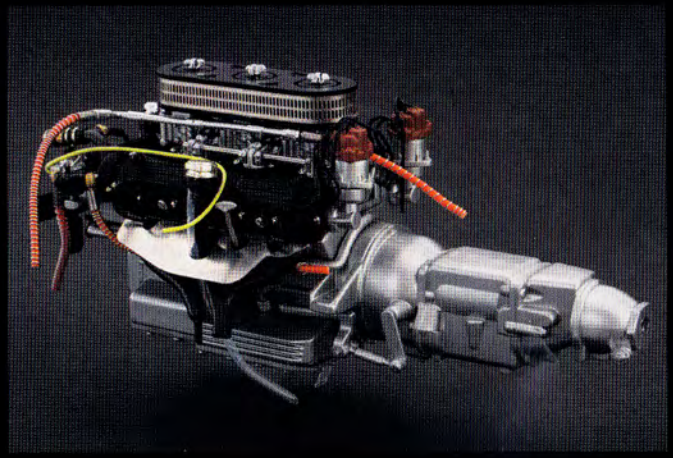

A real gem. Meticulous replication of the legendary Colombo 12-cylinder V-engine that is complete with wiring and cabling.

Beauty and functionality: The replica poised with the doors, hinged engine hood, and trunk lid opened to reveal fine leather covering the seats and interior complete with inlaid map pockets and the Nardi three-spoke steering wheel.

The manufactured product might look slightly different.

Produced under license of Ferrari S.p.A.. FERRARI, the PRANCING HORSE device, all associated logos and distinctive designs are trademarks of Ferrari S.p.A.. The body designs of the Ferrari cars are protected as Ferrari property under design, trademark and trade dress regulations.

Ferrari
Official Licensed Product

CMC GmbH & Co. KG Classic Model Cars
Robert-Bosch-Straße 41 · D 73770 Denkendorf · Germany
Phone: +49 (0)711-4 40 07 99-0 · Fax: +49 (0)711-45 43 78
info@cmc-modelcars.de · www.cmc-modelcars.de

CMC Exclusive Modelle